172156-1 ✔ ACTIVE

MATE-N-LOK | Mini-Universal MATE-N-LOK

TE Internal #: 172156-1

Rectangular Power Connectors, Housing, Receptacle, Wire-to-Wire, 1 Position, Wire & Cable, UL 94V-0, Mini-Universal MATE-N-LOK

View on TE.com >

Connectors > Power Connectors > Rectangular Power > Rectangular Power Connectors

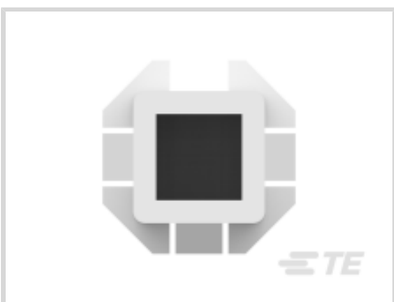

Rectangular Power Connector Type: **Housing**

Connector & Housing Type: **Receptacle**

Connector System: **Wire-to-Wire**

Number of Positions: **1**

Sealable: **No**

Features

Product Type Features

Rectangular Power Connector Type	Housing
Connector & Housing Type	Receptacle
Connector System	Wire-to-Wire
Sealable	No
Connector & Contact Terminates To	Wire & Cable

Configuration Features

Number of Positions	1
Number of Rows	1

Electrical Characteristics

Operating Voltage	600 VDC

Contact Features

Contact Layout	Inline
Multiple Contact Types	Without
Contact Retention Within Housing	Without

Contact Type	Pin

Termination Features

Termination Method to Wire & Cable	Crimp

Mechanical Attachment

Panel Mount Feature	Without
Connector Mounting Type	Cable Mount (Free-Hanging)

Housing Features

Housing Color	Natural
Housing Material	Nylon, Nylon-94V

Dimensions

Width	8.2 mm
	.031 – .078 in
Height	8.2 mm
Length	23.7 mm

Usage Conditions

Operating Temperature Range	-20 – 105 °C[-4 – 221 °F]

Operation/Application

Assembly Integration Feature	Without
Circuit Application	Power & Signal

Industry Standards

CSA Rating	Certified
UL Flammability Rating	UL 94V-0
Glow Wire Rating	Standard Part - Not Glow Wire
Agency/Standard Number	E28476
Agency/Standard	CSA, UL
UL Rating	Recognized
CSA File Number	LR7189
VDE Tested	No

Packaging Features

Packaging Method	Bag
Packaging Quantity	1000

Other

For Use With	Mini-Universal MATE-N-LOK Cap Housing

Product Compliance

For compliance documentation, visit the product page on TE.com>

EU RoHS Directive 2011/65/EU	Compliant
EU ELV Directive 2000/53/EC	Compliant
China RoHS 2 Directive MIIT Order No 32, 2016	No Restricted Materials Above Threshold
EU REACH Regulation (EC) No. 1907/2006	Current ECHA Candidate List: JUNE 2022 (224) Candidate List Declared Against: JUNE 2022 (224) Does not contain REACH SVHC
Halogen Content	Low Halogen - Br, Cl, F, I < 900 ppm per homogenous material. Also BFR/CFR/PVC Free
Solder Process Capability	Not applicable for solder process capability

Product Compliance Disclaimer

This information is provided based on reasonable inquiry of our suppliers and represents our current actual knowledge based on the information they provided. This information is subject to change. The part numbers that TE has identified as EU RoHS compliant have a maximum concentration of 0.1% by weight in homogenous materials for lead, hexavalent chromium, mercury, PBB, PBDE, DBP, BBP, DEHP, DIBP, and 0.01% for cadmium, or qualify for an exemption to these limits as defined in the Annexes of Directive 2011/65/EU (RoHS2). Finished electrical and electronic equipment products will be CE marked as required by Directive 2011/65/EU. Components may not be CE marked. Additionally, the part numbers that TE has identified as EU ELV compliant have a maximum concentration of 0.1% by weight in homogenous materials for lead, hexavalent chromium, and mercury, and 0.01% for cadmium, or qualify for an exemption to these limits as defined in the Annexes of Directive 2000/53/EC (ELV). Regarding the REACH Regulation, the information TE provides on SVHC in articles for this part number is based on the latest European Chemicals Agency (ECHA) 'Guidance on requirements for substances in articles' posted at this URL: https://echa.europa.eu/guidance-documents/guidance-on-reach

Compatible Parts

TE Part # 1-770985-0
MINI UMNL PIN 26-22AWG AU LP

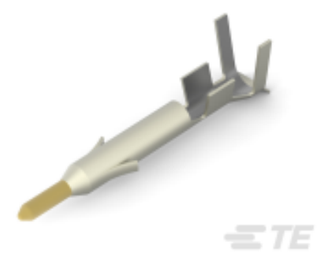

TE Part # 1-770987-0
MINI UMNL PIN 22-18 AWG AU LP

TE Part # 770988-3
MINI UMNL SOK 22-18AWG AU LP

TE Part # 1-770988-0
MINI UMNL SOK 22-18AWG AU

TE Part # 1-794059-0
MINI UMNL PIN L/P LF

TE Part # 770988-1
MINI UMNL SOK 22-18AWG SN LP

TE Part # 770986-1
MINI UMNL SOK 26-22AWG SN LP

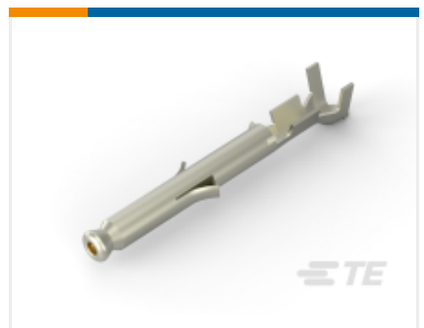

TE Part # 170365-3
MINI UNIVERSAL M-N-L SOCKET LP

TE Part # 170364-3
MINI UNIVERSAL M-N-L PIN LP

TE Part # 770985-1
MINI UMNL PIN 26-22AWG SN LP

TE Part # 1-794407-1
MINI UMNL SOK 20-16 AWG AU LF

TE Part # 170363-3
MINI UNIVERSAL M-N-L PIN LP

TE Part # 171638-1
MINI U-M-N-L PIN CONT. L.P

TE Part # 171639-1
MINI U-M-N-L SOCKET L.P

TE Part # 770903-3
MINI UMNL PIN 22-18 AWG AU

TE Part # 170364-1
MINI UNIVERSAL M-N-L PIN LP

TE Part # 1-770902-1
MINI UMNL SOK 26-22 AWG AU LF

TE Part # 170366-1
MINI UNIVERSAL M-N-L SOCKET LP

TE Part # 170363-1
MINI UNIVERSAL M-N-L PIN LP

TE Part # 170365-1
MINI UNIVERSAL M-N-L SOCKET LP

Also in the Series | Mini-Universal MATE-N-LOK

Connector Contacts(11)

Insertion & Extraction Tools(1)

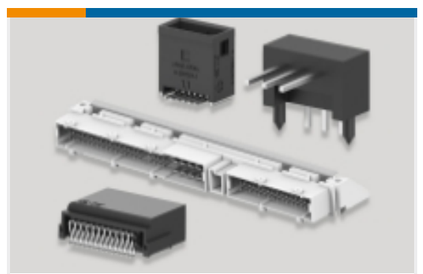

PCB Headers & Receptacles(1)

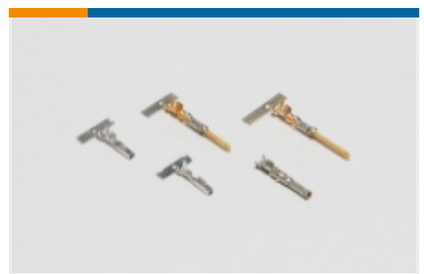

Power Contacts(85)

Rectangular Backshells & Clamps(2)

Rectangular Boots & Strain Relief(2)

Rectangular Connector Keying Plugs(2)

Rectangular Connector Locking(2)

Rectangular Connector Seals(20)

Rectangular Power Connectors(283)

Documents

Product Drawings

1 CIR UNIV M-N-L CAP

English

CAD Files

3D PDF

3D

Customer View Model

ENG_CVM_CVM_172156-1_G.2d_dxf.zip

English

Customer View Model

ENG_CVM_CVM_172156-1_G.3d_igs.zip

English

Customer View Model

ENG_CVM_CVM_172156-1_G.3d_stp.zip

English

By downloading the CAD file I accept and agree to the Terms and Conditions of use.

Datasheets & Catalog Pages

SOFT_SHELL_PIN_AND_SOCKET_CONNECTORS_CATALOG

English

1-1773458-0_MINI_UNIVERSAL_MATE_N_LOK_CONNECTOR_SYSTEM_QRG

English

Product Specifications

Application Specification

English

Product Environmental Compliance

MD_172156-1_03292018213_dmtec

English

MD_172156-1_03292018213_dmtec

English

Instruction Sheets

Instruction Sheet (U.S.)

English

Instruction Sheet (U.S.)

English

Agency Approvals

Agency Approval Document

English

Agency Approval Document

English